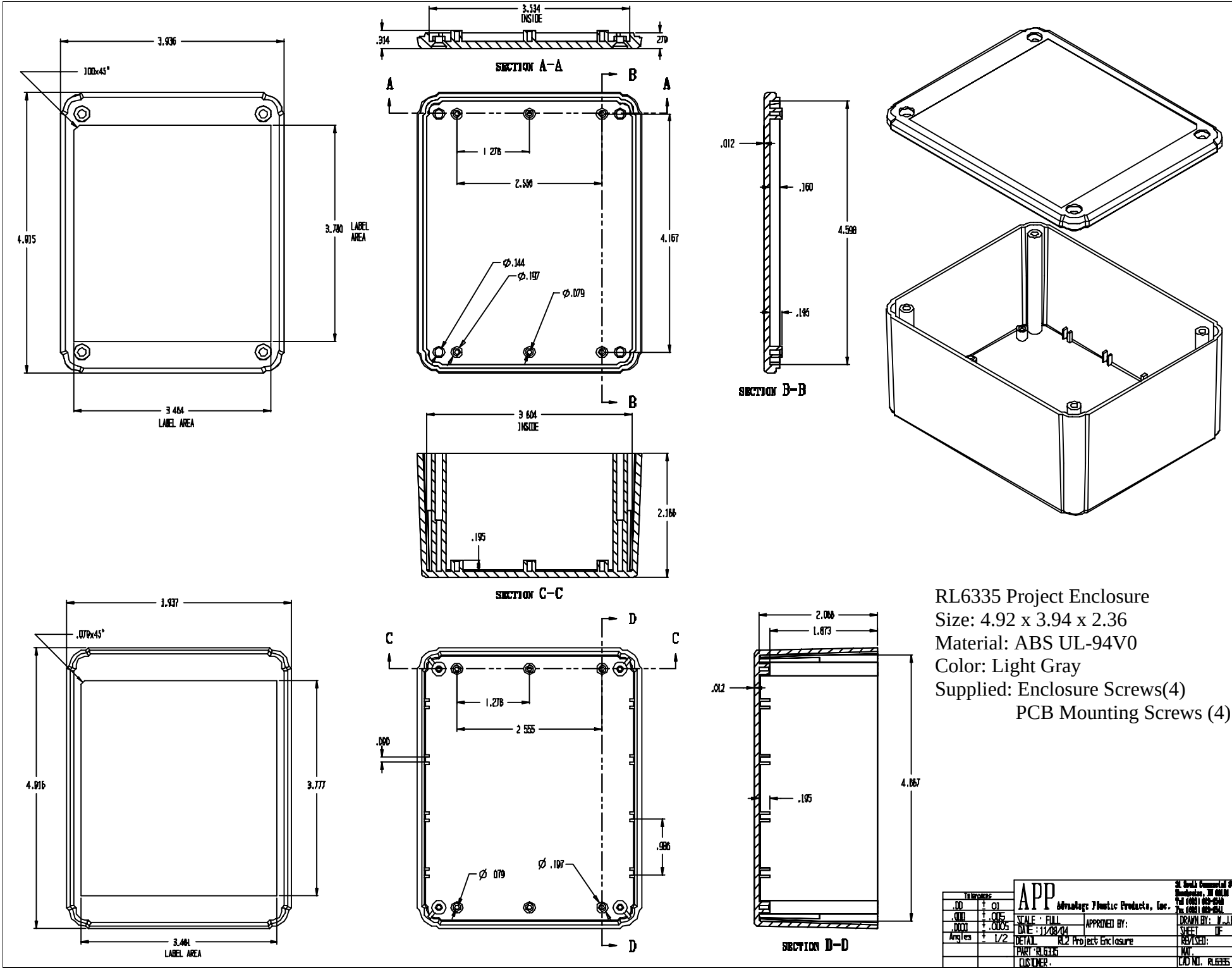
3.936
.100x45°
4.915
3.780 LABEL AREA
3.484 LABEL AREA
3.534 INSIDE
.314
.270
SECTION A-A
A
B
1.278
2.556
4.167
Ø.144
Ø.197
Ø.079
.012
.160
.195
4.598
SECTION B-B
3.604 INSIDE
2.166
.195
SECTION C-C
3.937
.070x45°
4.916
3.777
3.484 LABEL AREA
C
D
1.278
2.555
.090
.986
Ø .079
Ø .197
2.066
1.873
.012
.195
4.867
SECTION D-D
RL6335 Project Enclosure
Size: 4.92 x 3.94 x 2.36
Material: ABS UL-94V0
Color: Light Gray
Supplied: Enclosure Screws(4)
PCB Mounting Screws (4)
Tolerances
.00 ± .01
.000 ± .015
.0000 ± .0005
Angles ± 1/2
APP Advanced Plastic Products, Inc.
SCALE : FULL
APPROVED BY:
DRAWN BY: W.J.B.
DATE : 11/08/04
SHEET OF
DETAIL RL2 Project Enclosure
REVISED:
PART RL6335
MAT.
CUSTOMER.
CAD NO. RL6335 DRW