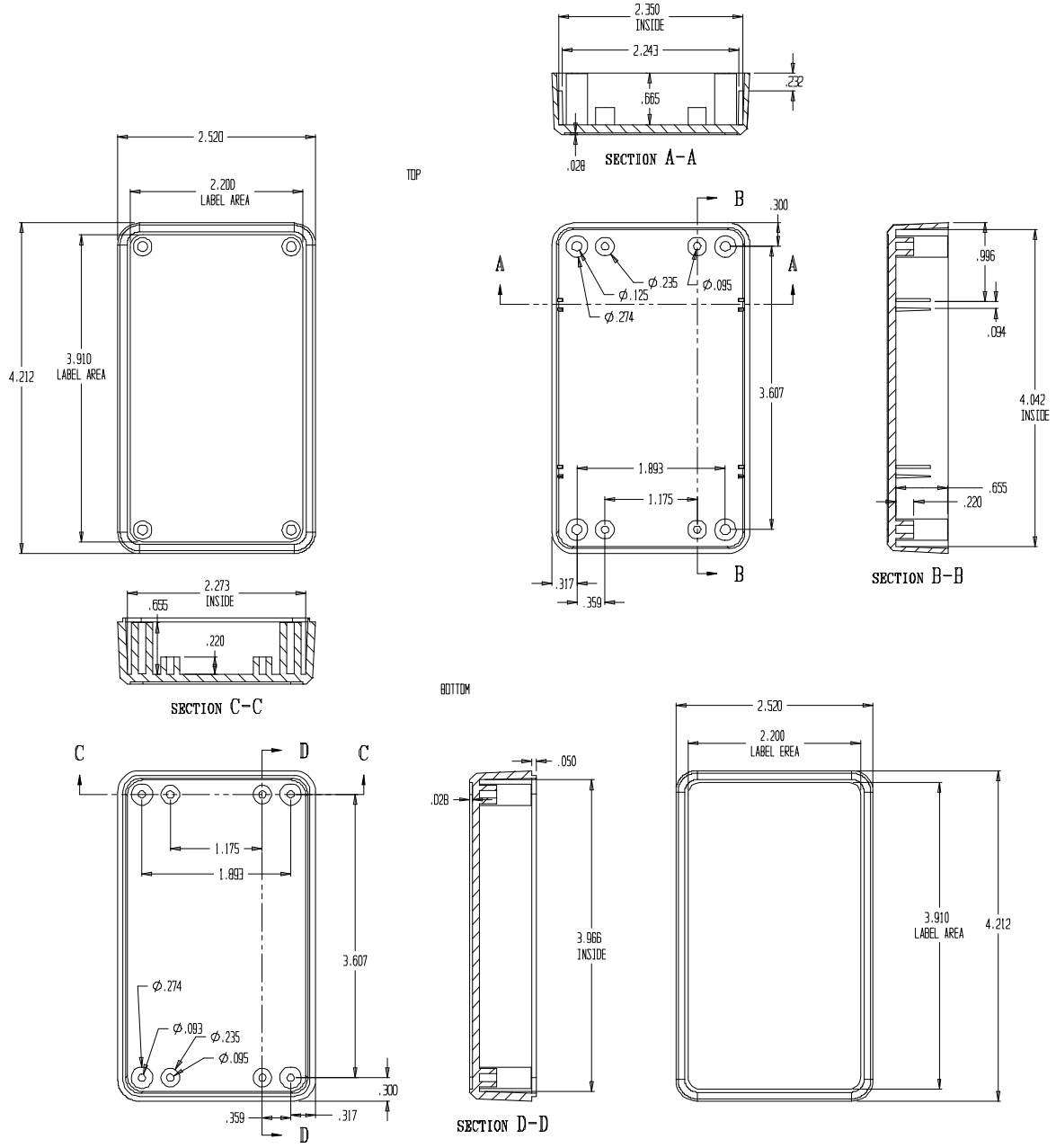

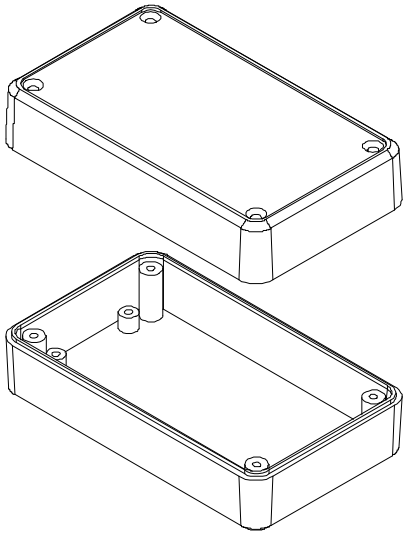

RL6015 Project Enclosure
Size: 4.20 x 2.50 x .78
Material: ABS UL-94V0
Color: Light Gray
Supplied: Enclosure Screws (4)
PCB Mounting Screws (4)

APP Advantage Plastic Products, Inc.		31 South Commercial Street Manchester, NH 03101 Tel (603) 629-9540 Fax (603) 629-9541
SCALE : NONE	APPROVED BY:	DRAWN BY: W.J.B.
DATE : 12/19/2000		SHEET OF
DETAIL:	PROJECT ENCLOSURE	REVISED:
PART:RL6015		MAT.
CUSTOMER :		CAD NO. RL6015